MOTON SHOCK ORDER FORM

24 Hour Fax Order Line
(309) 691-8796

HOERR RACING PRODUCTS
4802 Competition Lane
Peoria, IL 61615

PO #: _____ **Date:** _____

BILLING ADDRESS:	**SHIPPING ADDRESS:**
Name: _____	Name: _____
Address: _____	Address: _____
_____	_____
City: _____ State: _____	City: _____ State: _____
Zip: _____ Country: _____	Zip: _____ Country: _____
Daytime Phone: _____	Daytime Phone: _____

SHIP VIA: ALL SHIPMENTS ARE BY 2 DAY AIR FROM HOLLAND AT <u>NO CHARGE</u>

INFORMATION NEEDED TO ORDER ADJUSTABLE MOTON DAMPERS

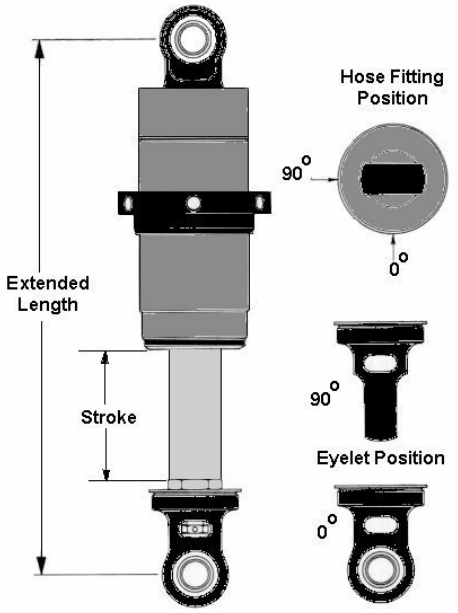

	FRONT	REAR
Shock Part #		
Quantity		
Extended Length		
Required Stroke		
Hose Length (Shortest Possible is Best)		
Hose Fitting Position (0° or 90°)		
Eyelet Window Position (0° or 90°)		
Spring I.D. to be Used		
Type & Class of Race Car		
Race Car Weight		
Normal Front Spring Rate		
Normal Rear Spring Rate		

METHOD OF PAYMENT: ☐ COD ($7.00 charge) ☐ VISA ☐ Master Card ☐ Account (Requires current HRP account)

OTHER: _____

Card Number:

☐☐☐☐ ☐☐☐☐ ☐☐☐☐ ☐☐☐☐

Exp. Date:

☐☐☐☐

_____
Name as appears on card

_____
Signature